Nozzle table			
No.	Size	Material	Description
N1	DN80 PN10	1.4404	VACUUM INLET
N2	DN65 PN10	1.4404	DISCHARGE OUTLET
N3	DN100 PN10	1.4404	VENTLATION OUTLET
N4	R½"	1.4404	FLUSHING CONNECTION
N5	R½"	1.4404	FLUSHING CONNECTION
N6	R½"	1.4404	FLUSHING CONNECTION
N7	R½"	1.4404	FLUSHING CONNECTION
N8	R¾"	1.4404	FLUSHING CONNECTION
N9	R¾"	1.4404	FLUSHING CONNECTION
N10	R¾"	1.4404	FLUSHING CONNECTION

Rev.	Information	Description of changes	Date	Sign.
C	-	MODIFIED & ADDED OPTIONAL VACUUM INLETS	22.05.2017	AS
D		ADDED SPILL TRAY AND CHANGED VACUUM INLET POSITION	25.09.2017	AS
E		Updated control panel position	21.12.2017	DaC
F		Drip trays added+frame modified	15.05.2018	NiT
G		DRAIN CONNECTION INFORMED	23.05.2018	NiT

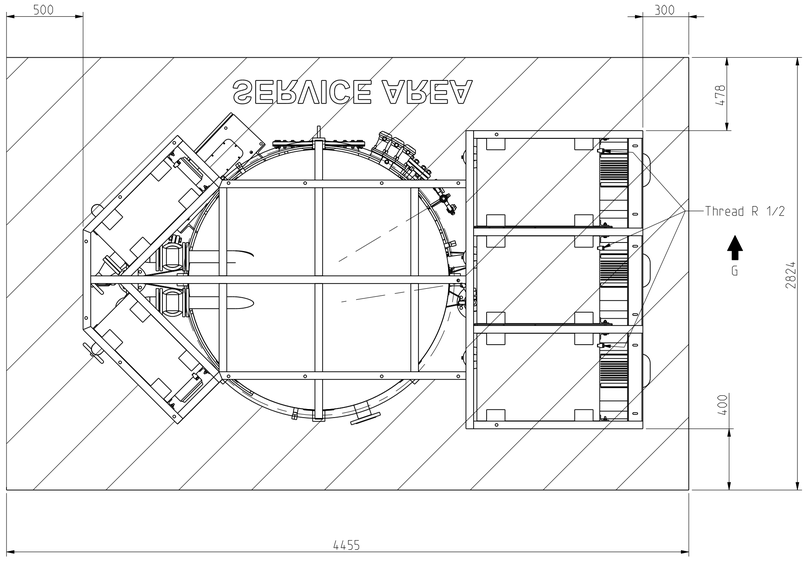

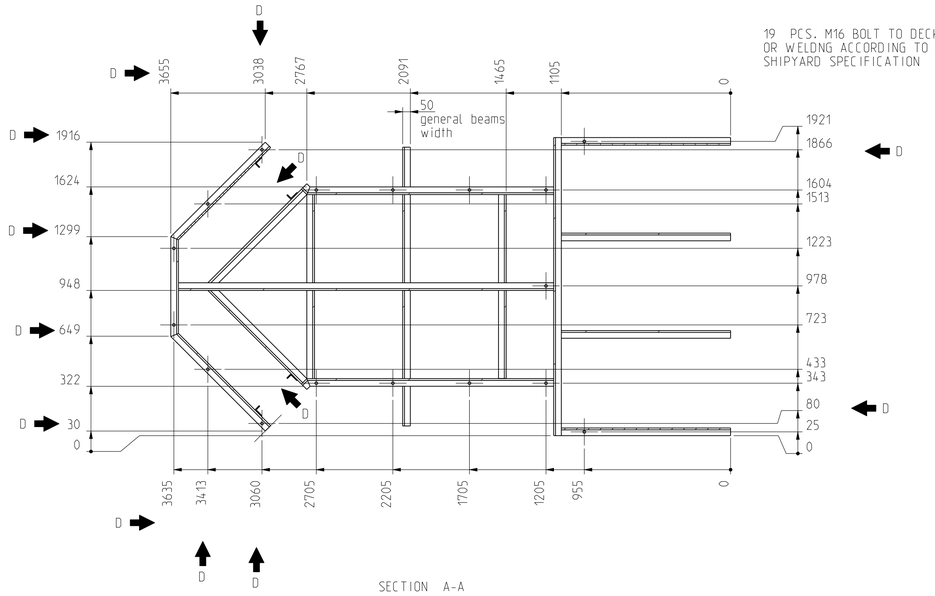

SECTION A-A

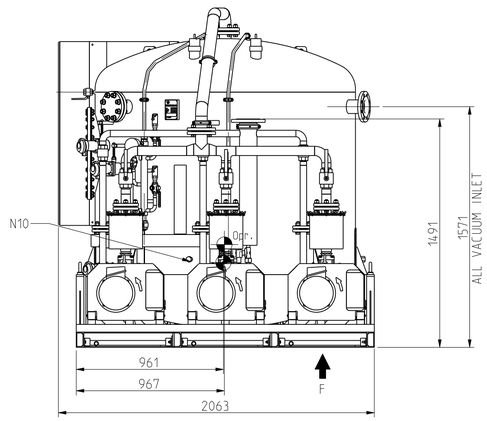

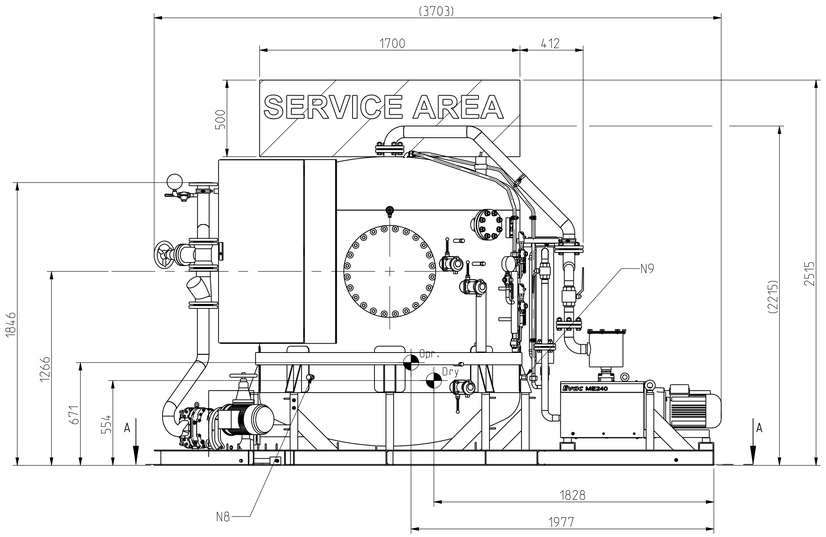

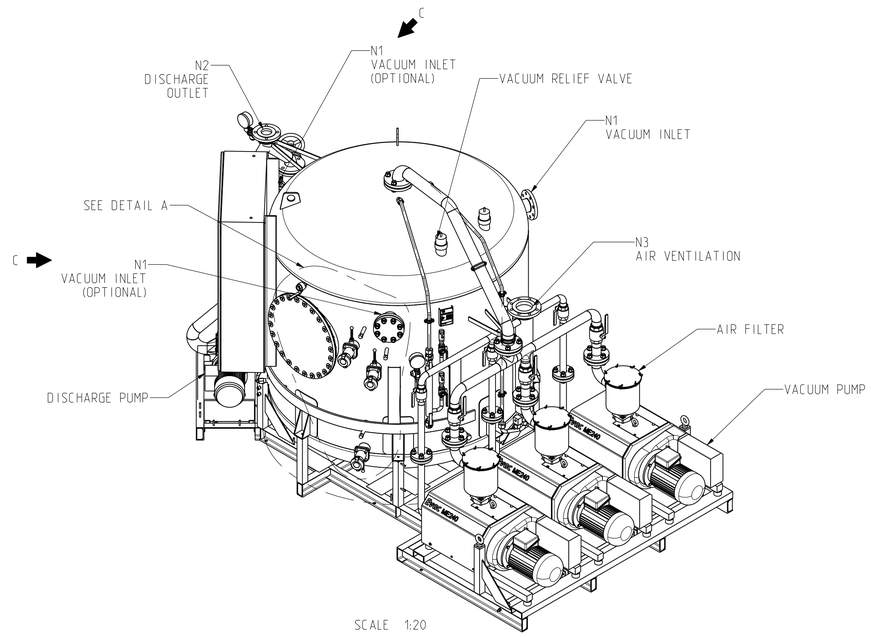

SCALE 1:20

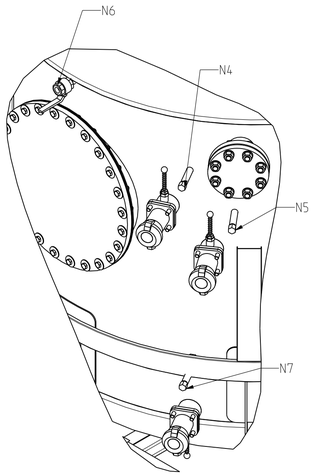

DETAIL A
SCALE 1:10

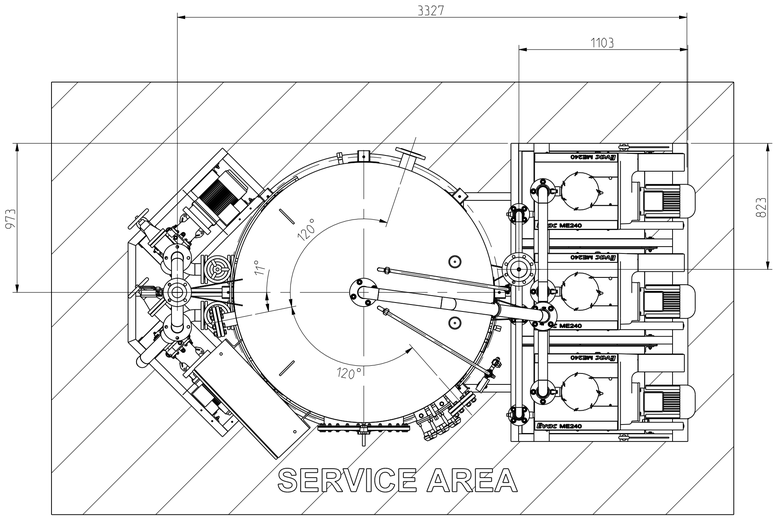

General Notes	
General tolerance	ISO 2768-mK Valid unless otherwise specified.
Materials	Frame: S235 Piping: 1.4404 Valid unless otherwise specified.
Dry weight	2305 kg ± 5%
Opr. weight	5370 kg ± 5%

PROJECT	GLOBAL BN125
TAG	BN125.XXXX

Item	Qty	Drawing	Description	Material
1	1	6580290	VACUUM UNIT	- -

Evac

Sheet 1 of 1 | Size A1 | Scale 1:20 | Units: mm | Material | Mass 2305 kg | Project 6118901

VACUUM UNIT 1 (VCU3720)
General Arrangement

State: Released

Drawing: 6580289- | Rev.: G

This drawing contains confidential information and is the property of Evac. It may not be copied or disclosed to third parties without the written consent of Evac.

N:6580289G.2 Released 01/06/2018